

D-TECT Laser

Laser Detection

The D-TECT Laser is a laser based security device designed to create virtual curtains and surveillance security zones. The D-TECT Laser is programmable to within 10cm and operates with the highest levels of precision for accurate and reliable intrusion detection.

APPLICATIONS

- Monitoring pedestrian and vehicle access points
- Perimeter protection and intrusion detection
- Safeguarding works of art and masterpieces
- Protection against theft and vandalism
- Securing open sites

EASE OF INSTALLATION

- 3 visible red LASER beams can be activated to align the detection surface and adjust the tilt and rotation angles
- Teach-in function: self-learning of both environment and background through an automatic adjustment of the detection planes
- Remote control to easily set the adjustable parameters

FEATURES

Covert operation: the LED display can be switched off with the remote control

4 adjustable sensing curtains to provide alarm & pre-alarm warning

High immunity to environmental interference using dedicated time of flight software

BENEFITS

Capacity to detect or ignore objects with a remission factor down to 2%

Discreet design with optional black or white housing

IP65 rated, indoor and outdoor applications

Extremely reliable detection

PRODUCT CODES

GJD500	D-TECT Laser 25m x 25m Black
GJD500/W	D-TECT Laser 25m x 25m White
GJD505	D-TECT Laser 5m x 5m Black
GJD505/W	D-TECT Laser 5m x 5m White
GJD509	D-TECT Laser 10m x 10m Black
GJD509/W	D-TECT Laser 10m x 10m White

w: www.gjd.co.uk • **t:** +44 (0) 1706 363 998 • **e:** sales@gjd.co.uk

GJD
An AVA Group Company

SPECIFICATIONS

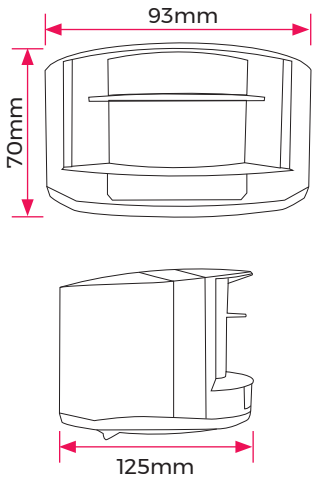

ACCESSORIES		
GJD501		**D-TECT Laser Programmer** The user friendly programmer allows all settings and parameters to be easily set and adjusted.
GJD511		**D-TECT Laser Bracket** This bracket is required when fitting the laser 'end on' to a wall or post.
GJD513		**D-TECT Laser Spot Finder** The Spotfinder is a set up tool that enables the engineer to locate the precise position of the laser curtains.

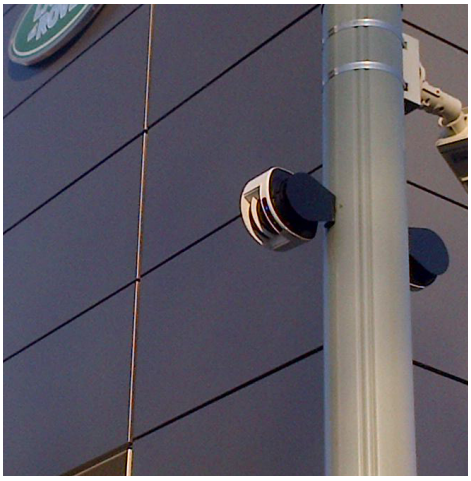

Technology
Laser scanner, time-of-flight measurement

Detection Mode
Movement and presence

Max. Detection Range
GJD500: 25m x 25m
GJD509: 10m x 10m
GJD505: 5.0 x 5.0m

Angular Resolution
0.3516*

Remission Factor
>2%

Typ. Min.target Size
2.1cm @ 3m / 3.5cm @ 5m / 7cm @ 10m / 17.5cm @ 25m (in proportion to object distance)

Emission Characteristics
Ir Laser
Wavelength 905 nm; max. output pulse power 75W (Class 1)

Red Visible Laser
Wavelength 650 nm; max. output CW power 3mW (Class 3R)

Supply Voltage
24VDC 3A Supply

Cable Length
10m

Peak Current At Power On
2.625A max 80ms @ 24VDC

Response Time
Typ. 20 ms; max. 80 ms

Output
2 electronic relays (galvanic isolated – polarity free)

Max Switching Voltage
5V DC / 24V AC

Max Switching Current
80mA (resistive)

LED Signals
1 blue LED: power-on status, 1 orange LED: error status, 2 bicoloured LED's: detection/output status (green: no detection. red: detection.) The LED's can be switched off by remote control

Material
PC/ASA (colour: black or white)

Rotation Angles On Bracket
-5˚ to +5˚ (lockable)

Tilt Angles On Bracket
-3˚ to +3˚

Protection Degree
IP65 (avoid direct exposure to high pressure cleaning)

Temperature Range
-30˚C to +60˚C if powered / -10˚C to +60˚C unpowered

Humidity
0-95% non-condensing

Vibrations
<2G

Norm Conformity
2006/95/EC: LVD; 2002/95/EC. RoHS; 2004/108/EC: EMC;
EN 60529:2001, IEC 60825-1:2007 Laser Class 1 & 3R;
EN61000-6-2:2019 – Industrial level;
EN 61000-6-3:2007+AI:2011 – Commercial level

APPLICATIONS

Residential
Commercial
Government
Industrial
Transportation
Military Bases
Heritage

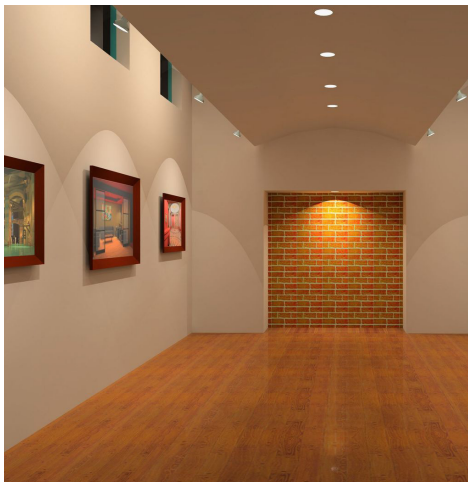



w: www.gjd.co.uk • **t:** +44 (0) 1706 363 998 • **e:** sales@gjd.co.uk
Unit 2, Birch Business Park, Whittle Lane, Heywood, Greater Manchester, OL10 2SX, UK

GJD
An AVA Group Company